NAME :SHEIKH WASIMUDDIN
BRANCH: CSE IOT
ROLL NO. :73
REG. NO. : 23071044

Practical - 04

Aim	Installation of ESP 32 board and testing installation by interfacing LED.
Software used	Arduino UNO IDE
Hardware used	1. ESP 32 Board
Components required	1. ESP 32 Board 2. Jumper wires 3. Led 4. Resistors 5. Breadboard
Circuit diagram	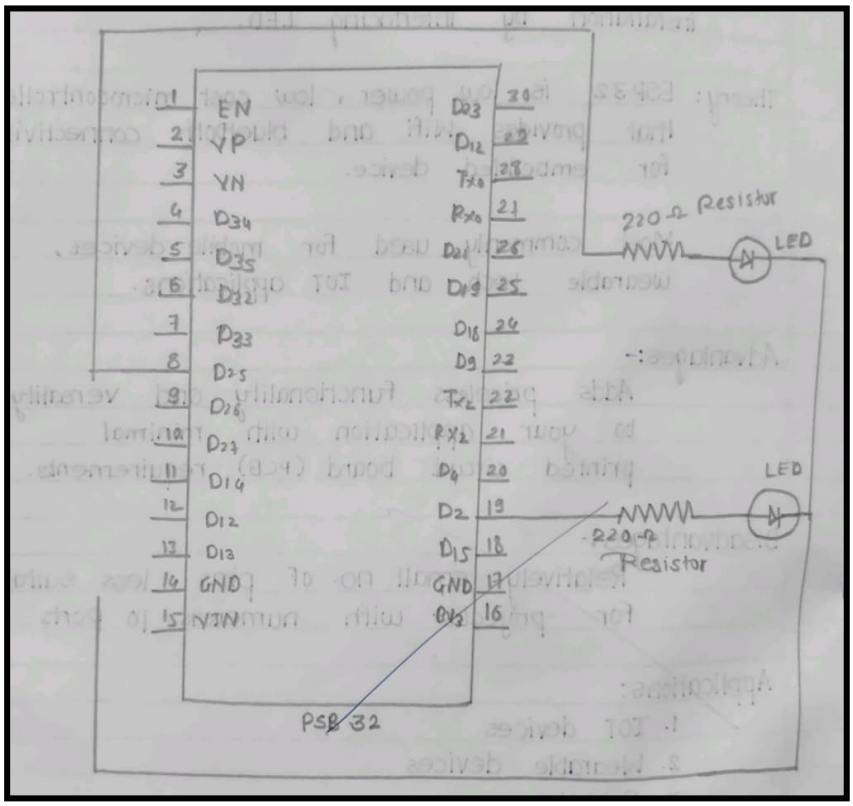
Theory	**What is ESP32?** • The ESP32 is a low-cost, low-power system-on-a-chip (SoC) microcontroller with integrated Wi-Fi and Bluetooth capabilities. It's produced by Espressif Systems. • It combines a dual-core or single-core Tensilica LX6 microprocessor, a variety of peripherals, and wireless connectivity into a single chip. • It's designed for a wide range of applications, especially in the Internet of Things (IoT) field, where wireless connectivity is essential. **Advantages of ESP32:**

NAME :SHEIKH WASIMUDDIN
BRANCH: CSE IOT
ROLL NO. :73
REG. NO. : 23071044

- **Integrated Wi-Fi and Bluetooth:**
  - This is a major advantage, eliminating the need for separate Wi-Fi or Bluetooth modules.
  - It supports both classic Bluetooth and Bluetooth Low Energy (BLE).
- **Dual-Core Processor:**
  - The dual-core architecture allows for parallel processing, improving performance and enabling complex tasks to be handled efficiently.
  - This is very helpful for real time applications.
- **Low Power Consumption:**
  - The ESP32 is designed for power efficiency, making it suitable for battery-powered applications.
  - It has deep sleep modes, that drastically lower power consumption.
- **Rich Peripherals:**
  - It offers a wide range of peripherals, including GPIO pins, analog-to-digital converters (ADCs), digital-to-analog converters (DACs), SPI, I2C, UART, and more.
- **Large Community and Support:**
  - The ESP32 has a large and active community, providing ample resources, libraries, and support.
  - Espress if systems also provides excellent documentation.
- **Affordable:**
  - ESP32 modules are relatively inexpensive, making them accessible to hobbyists and professionals alike.

Disadvantages of ESP32:

- **Higher Power Consumption Compared to Some Microcontrollers:**
  - While low power for its capabilities, it consumes more power than simpler microcontrollers when actively using Wi-Fi or Bluetooth.
- **Complexity:**
  - The ESP32's extensive features and capabilities can make it more complex to program and configure compared to simpler microcontrollers.
- **Some pin limitations:**
  - some pins have limitations during boot, and some pins are not recomended for some uses.
- **Radio Frequency Interference:**
  - Because of the wireless capabilities, care must be taken during design to reduce Radio frequency interference.

Applications of ESP32:

- **Internet of Things (IoT) Devices:**
  - Smart home devices, environmental monitoring, industrial automation, and wearable devices.
- **Wireless Sensor Networks:**
  - Collecting and transmitting data from remote sensors.
- **Home Automation:**
  - Controlling lights, appliances, and other home devices.
- **Audio Applications:**
  - Streaming audio, voice recognition, and audio processing.

NAME :SHEIKH WASIMUDDIN
BRANCH: CSE IOT
ROLL NO. :73
REG. NO. : 23071044

- **Wearable Electronics:**
  - Smartwatches, fitness trackers, and other wearable devices.
- **Robotics:**
  - Controlling robotic systems.
- **Educational Purposes:**
  - Learning embedded systems, IoT, and wireless communication.

Code

```
#include "WiFi.h"

void setup() {
  Serial.begin(115200);

  // Set WiFi to station mode and disconnect from an AP if it was previously
connected
  WiFi.mode(WIFI_STA);
  WiFi.disconnect();
  delay(100);

  Serial.println("Setup done");
}

void loop() {
  Serial.println("scan start");

  // WiFi.scanNetworks will return the number of networks found
  int n = WiFi.scanNetworks();
  Serial.println("scan done");
  if (n == 0) {
      Serial.println("no networks found");
  } else {
    Serial.print(n);
    Serial.println(" networks found");
    for (int i = 0; i < n; ++i) {
      // Print SSID and RSSI for each network found
      Serial.print(i + 1);
      Serial.print(": ");
      Serial.print(WiFi.SSID(i));
      Serial.print(" (");
      Serial.print(WiFi.RSSI(i));
      Serial.print(")");
      Serial.println((WiFi.encryptionType(i) == WIFI_AUTH_OPEN)?" ":"*");
      delay(10);
    }
  }
  Serial.println("");

  // Wait a bit before scanning again
  delay(5000);
}
```

Output

NAME :SHEIKH WASIMUDDIN
BRANCH: CSE IOT
ROLL NO. :73
REG. NO. : 23071044

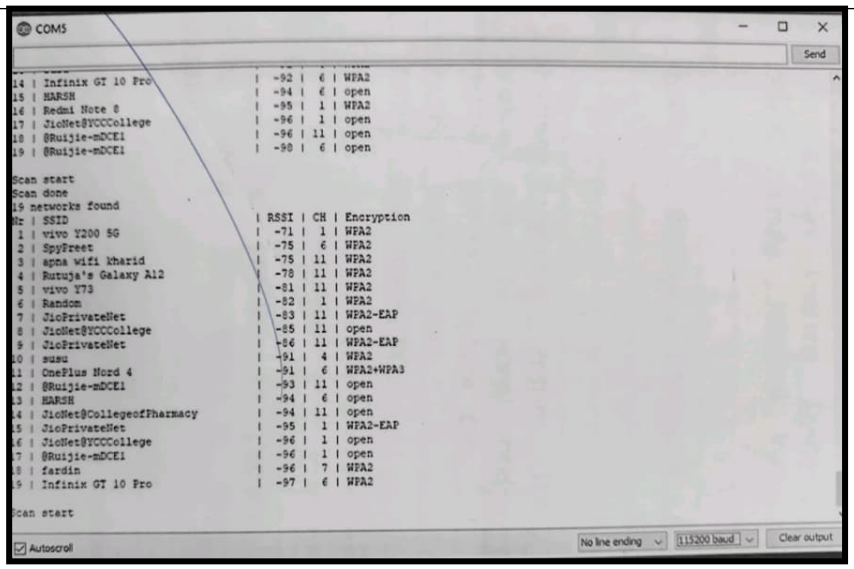

Conclusion	Installation of ESP 32 board and testing installation by interfacing LED executed successfully.